Notes:

1. Concrete shall be per Section 499 – P.C. Concrete, Class G.
2. 1.25 CF of concrete per LF.
3. All exposed surfaces of concrete curb & gutter shall have a brush finish.
4. When specified, 3–#4 bars spaced at 9" on center shall be used for reinforcement.

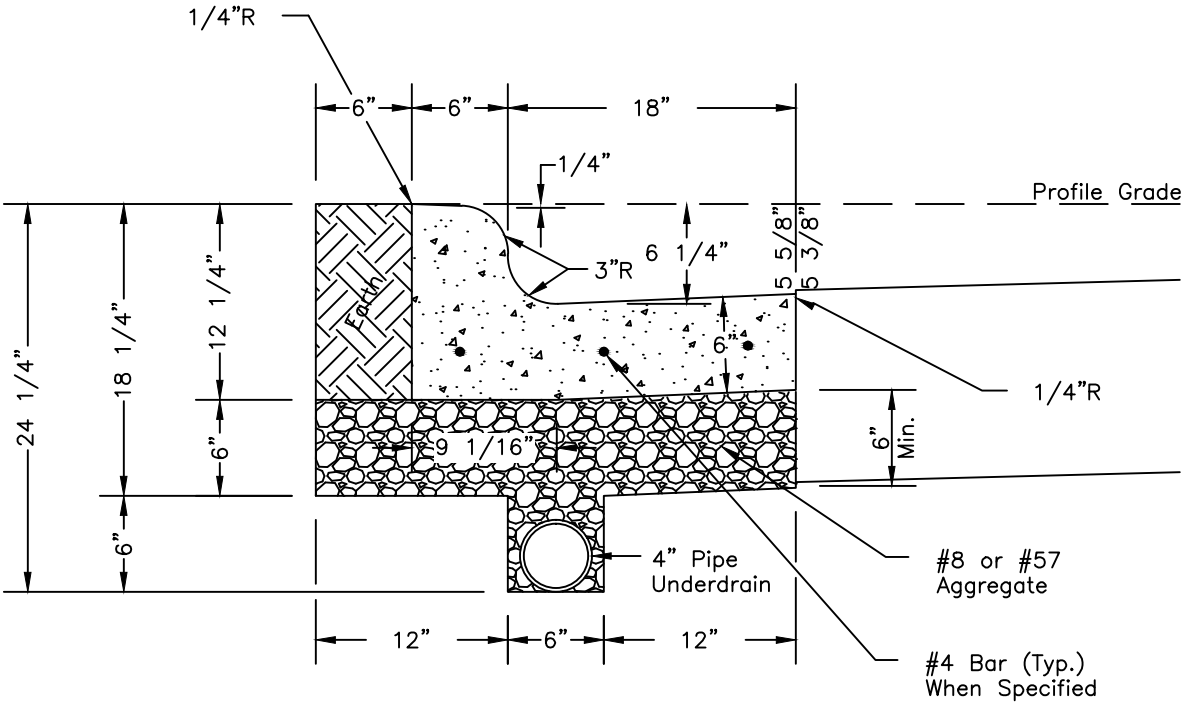

APPROVED	ITEM 609 STANDARD 6" CONCRETE COMBINED CURB & GUTTER	CITY OF HILLIARD, OHIO
CITY ENGINEER DATE		STANDARD CONSTRUCTION DRAWING
SCALE: 1" = 1'		1/1 CG–1

S:\Public Service - Engineering\Hilliard Standards\Drawings\ACAD\Curb & Gutter.dwg, 4/25/2013 8:19:07 AM