Exhibit A

Luminaire Schedule

Symbol	Label	Quantity	Manufacturer	Catalog Number	Description	Lamp	Number Lamps	Filename	Lumens Per Lamp	Light Loss Factor	Wattage
	Type 2	8	EATON - McGRAW-EDISON (FORMER COOPER LIGHTING) Decorative	TRR-50-LED-E1-2-XX	TRADITIONARE LED POST TOP FIXTURE - TYPE 2 DISTRIBUTION		1	TRR-50-LED-E1-2-XX.ies	2901.167	1	57.4
	Type 5	6	EATON - McGRAW-EDISON (FORMER COOPER LIGHTING) Decorative	TRR-50-LED-E1-5-XX	TRADITIONARE LED POST TOP FIXTURE - TYPE 5 DISTRIBUTION		1	TRR-50-LED-E1-5-XX.ies	3248.806	1	57.4

Statistics

Symbol	Description	Max	Min	Avg	Max/Min	Avg/Min
+	Front Canopy and Parking	0.71 fc	0.22 fc	0.37 fc	3.2:1	1.7:1
+	Front Drive	0.91 fc	0.05 fc	0.43 fc	18.2:1	8.6:1
+	Side Parking	1.08 fc	0.17 fc	0.49 fc	6.4:1	2.9:1
+	Site Boundary	0.21 fc	0.00 fc	0.02 fc	N/A	N/A

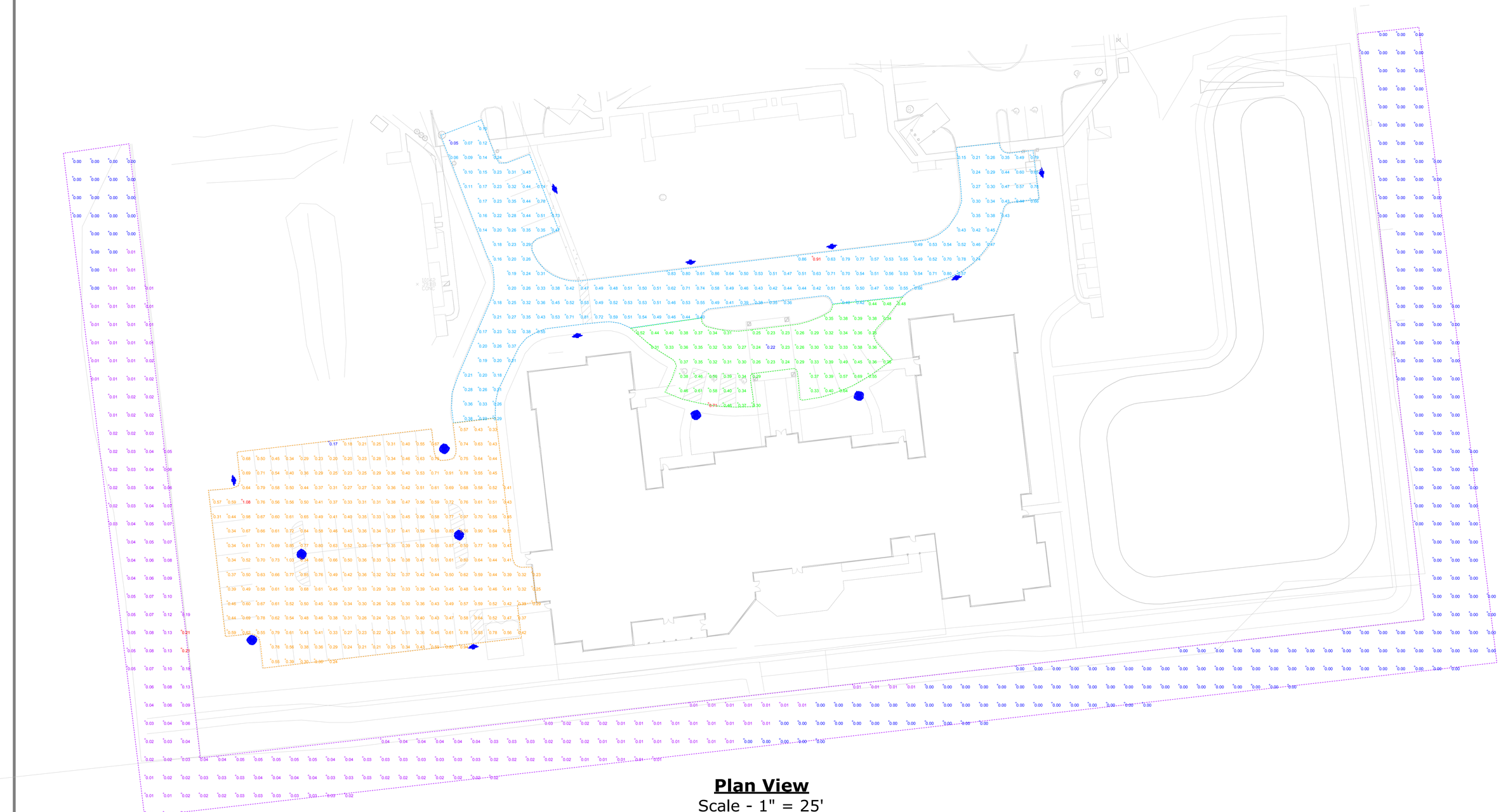

Plan View

Scale - 1" = 25'

PRATER ENGINEERING ASSOCIATES

ASHFORD AT STURBRIDGE
ASSISTED LIVING FACILITY
CONCEPTUAL SITE PHOTOMETRIC

Designer
PEA
Date
7/5/2016
Scale
As Noted
Drawing No.

McGRAW-EDISON®

energy solutions

DESCRIPTION

The Traditionaire™ luminaire displays the old-fashioned charm of traditional area lighting, enhancing any setting with a distinctive styling. UL listed and CSA certified for wet locations.

As a decorative luminaire, the Traditionaire luminaire tastefully complements the architectural and environmental design of estates, parks, motels, restaurants, apartments, churches, institutions and roadways.

Catalog #		Type
Project		
Comments		Date
Prepared by		

SPECIFICATION FEATURES

Construction
HOUSING + COVER: Hinged (stainless steel hinge pins) die-cast aluminum housing and cover with cupola.

Optical
REFRACTOR: The injection-molded acrylic refractor panels are precisely designed utilizing a combination of refractive an reflective prisms to create Type II or Type V distributions while maintaining a consistent exterior form. High efficiency refractive optical systems constructed of lighting grade acrylic ensures long lasting optical clarity and resistance to the gradual discoloration that results from exposure to sunlight.

Electrical
LED DRIVER: Assembly incorporates quick disconnects for ease of installation and maintenance. LED LIGHT ENGINE: Solid State LED engine provides even and uniform illumination without the pixilation common to LED applications. Thermal management incorporates both conduction and natural convection to transfer heat rapidly away from the LED source and retain optimal efficiency and light output. The LED replacement module is backwards compatible with existing Traditionaire luminaire installations enabling retrofit opportunities. Shipped standard with Cooper Lighting proprietary circuit module designed to withstand 10kV of transient line surge. 50,000 + hour life with >70% lumen maintenance. For low temperature operation the Traditionaire luminaire is suitable to -30°C.

Mounting
Self-aligning pole-top fitter fits 3" O.D. pole tops or vertical tenons. Square headed 1-1/4" polymer coated mounting bolts with a lock nut.

Finish
Cast components finished in a super-durable TGIC polyester powder coat paint, 2.5 mil nominal thickness for superior protection against fade and wear. Consult the McGraw-Edison Architectural Color brochure for a complete selection. Standard colors include: black, bronze, grey, white, dark platinum, graphite metallic and hartford green. RAL and custom color matches available.

Warranty
Five-year warranty.

TRR
TRADITIONAIRE™ LED

Solid State LED

POST TOP AREA LUMINAIRE

DIMENSIONS

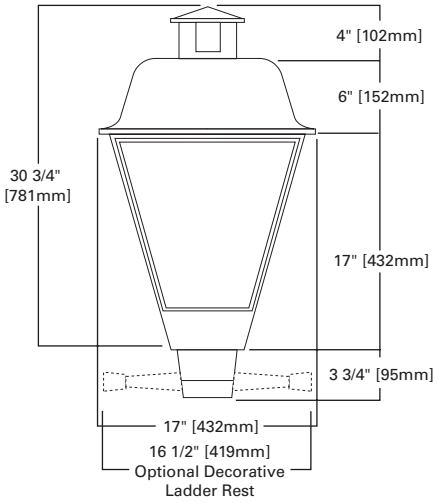

EPA
Effective Projected Area:
2.3 Sq. Ft.

SHIPPING DATA
Approximate Net Weight:
37 lbs. (17 kgs.)

Cooper Lighting
by EATON

ADH110216
2015-01-07 09:42:50

ORDERING INFORMATION

Sample Number: TRR-50-LED-E1-5-BK

Product Family	Lamp Package [1]	Source Type	Voltage	Distribution	Color [3]
TRR=Traditionaire	**50**=5000 Lumens	**LED**=Solid State Light-Emitting	**E1**=Electronic 120-277V	**2**=Type II **5**=Type V Refractive	**AP**=Grey **BZ**=Bronze **BK**=Black **GN**=Hartford Green **WH**=White **DP**=Dark Platinum **GM**=Graphite Metallic

Options (Add as Suffix)	**Accessories** (Order Separately)
P=Polycarbonate Refractor **R**=NEMA Twistlock Photocontrol Receptacle **S**=Tool-less Entry **2L**=Two Circuits **8030**=80 CRI/3000K CCT **SH**=Street Side/House Side Switching Capable	**OA/RA1016**=NEMA Twistlock Photocontrol - Multi-Tap **TA1BK**=Ladder Rest **MA1252**=10kV Circuit Module Replacement **TRR-50-E1**=5000 Lumen LED Replacement Module with 120-277V Universal Driver **TRR-50-E1-2L**=5000 Lumen LED Replacement Module with 120-277V Universal Driver and Bi-level Switching Capable **TRR-50-E1-SH**=5000 Lumen LED Replacement Module with 120-277V Universal Driver and Street Side/House Side Switching Capable

Notes:
1. LED module nominal source lumens prior to optical and confi guration losses based on 65 CRI/5000K package at 25°C ambient. Refer to IES files for delivered lumens by configuration.
2. Other finish colors available, including a full line of RAL color matches. Consult your Eaton's Cooper Lighting business representative.

GE
Lighting

Evolve™ LED Post Top

Salem (EPST)

imagination at work

Product Features

The Evolve™ LED Salem Post Top offers energy efficiency and quality of light in a classic, utility carriage look and style. The advanced LED optical system provides improved horizontal and vertical uniformity, reduced glare and improved lighting control. GE's unique optical ring technology effectively aims the light where you need it, while eliminating the unsightly shadow circles commonly seen under other LED post top fixtures.

The Salem post top can yield up to a 60-percent reduction in system energy compared with standard HID systems, depending on applications. This reliable system operates well in cold temperatures and offers more than 11 years of service life to reduce maintenance frequency and expense, based on a 50,000 hour life and 12 hours of operation per day. Containing no mercury or lead, this environmentally responsible product is RoHS compliant.

Applications

- Roadway, site, area, and general lighting utilizing advanced LED optical system providing high uniformity, excellent vertical illuminance, reduced offsite visibility, and reduced on-site glare.

Housing

- Die-cast aluminum housing.
- Traditional utilitarian "carriage" design incorporates the heat sink directly into the unit ensuring maximum heat transfer and long LED life.
- Meets 2G vibration standards per ANSI C136.31-2001. For 3G rating contact factory.

LED & Optical Assembly

- Structured LED array for optimized Roadway/walkway photometric and distribution.
- Evolve light engine consisting of nested concentric directional reflectors designed to optimize application efficiency and minimize glare.
- Utilizes high brightness LEDs, 70 CRI at 3000K and 4000K typical.
- LM-79 tests and reports are performed in accordance with IESNA standards.

Lumen Maintenance

- System rating is 50,000 hours at L85. Contact factory for L rating (Lumen Depreciation) beyond 50,000 hours.

Ratings

- UL c UL listed, suitable for wet locations.
- IP 65 rated optical enclosure per ANSI C136.25-2009.
- Temperature rated at –40° to 50°C.
- International Dark Sky Association listed. 3000k must be selected to meet IDA certification and approval.

Mounting

- Post top mounting 3-inch (76mm) OD held in place with three black squarehead set screws.

Finish

- Corrosion resistant polyester powder painted, minimum 2.0 mil. thickness.
- Standard colors: Black & Dark Bronze.
- RAL & custom colors available.

Electrical

- 120-277 volt and 347-480 volt available.
- System power factor is >=90% and THD <=20%.*
- Class "A" audible sound rating.
- Surge protection per IEEE/ANSI C62.41.-1991:
  - 120-277VAC: 4KV/2kA "Basic: (120 Strikes)"
  - 347-480VAC: 6KV/3kA "Basic: (120 Strikes)"
- EMI: Title 47 CFR Part 15 Class A.
- Photo Electric Sensors (PE) available for all voltages.

* System power factor and THD is tested and specified at 120V input and maximum load conditions.

Ordering Number Logic

Salem Post Top (EPST)

E P S T _ _ _ _ _ _ _ _ N _ _ P _ _ _ _ _ _ _

PROD. ID	VOLTAGE	OPTICAL CODE	LED COLOR TEMP	OPTICAL SIDE PANELS	PE FUNCTION	MOUNTING ARM	COLOR	OPTIONS
E = Evolve **P** = Post Top **S** = Salem **T** = Traditional	**0** = 120-277 **H** = 347-480 **1** = 120* **2** = 208* **3** = 240* **4** = 277* **5** = 480* **D** = 347* *Specify single voltage only if fuse option is selected.		**30** = 3000K **40** = 4000K	**N** = None	**1** = None **2** = PE Rec. **4** = PE Rec. with Shorting Cap **5** = PE Rec. with Control** **A** = ANSI C136.41 7-pin dimming PE Receptacle †# **D** = ANSI C136.41 7-pin dimming PE Receptacle with Shorting Cap †# **E** = ANSI C136.41 7-pin Receptacle with non-dimming PE Control †# ** PE control not available for 347-480V. Must be a discrete voltage (347V or 480V). † When ordering PE function socket A-E, a dimming driver must also be ordered under the "OPTIONS" column. # Order Dimming/Control PE as a separate item. **Note:** Not available with cupola.	**P** = Pole Mounted	**BLCK** = Black **DKBZ** = Dark Bronze Contact manufacturer for other colors.	**D2** = Dimmable (0-10 Volt Input)* **F** = Fusing **P** = Prewire with 6" of 14/3 cable **XXX** = Special Options * Only available in 120-277V.

	OPTICAL CODE	TYPE	TYPICAL INITIAL LUMENS		TYPICAL SYSTEM WATTAGE	POLE SPACING	BUG RATINGS 3000K & 4000K			IES FILE NUMBER	
			3000K	4000K	120-277V & 347-480V	2-4 LANES	B	U	G	3000K	4000K
TYPE V	C5	Symmetric	6,400	6,600	83	5:1	B3	U2	G1	EPST_C5_30N___.IES	EPST_C5_40N___.IES
TYPE V	E5	Symmetric	3,200	3,400	48	5:1	B2	U1	G1	EPST_E5_30N___.IES	EPST_E5_40N___.IES
TYPE III	C3	Asymmetric Wide	6,400	6,600	83	5:1	B1	U2	G2	EPST_C3_30N___.IES	EPST_C3_40N___.IES
TYPE III	E3	Asymmetric Wide	3,200	3,400	48	5:1	B1	U2	G1	EPST_E3_30N___.IES	EPST_E3_40N___.IES

Photometrics

EPST Type V – Symmetric (C5)
6,600 Lumens, 4000K

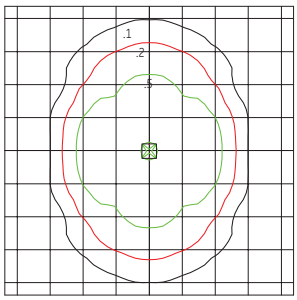

Grid Distance in Units of Mounting Height at 16'
Initial Footcandle Values at Grade

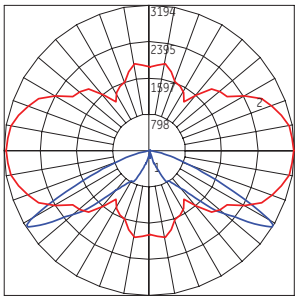

Polar Trace Vertical and Horizontal Plane through Horizontal Angle of Maximum Candlepower

EPST Type V – Asymmetric Wide (E5)
3,400 Lumens, 4000K

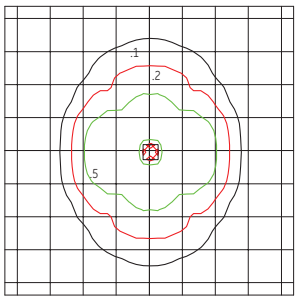

Grid Distance in Units of Mounting Height at 16'
Initial Footcandle Values at Grade

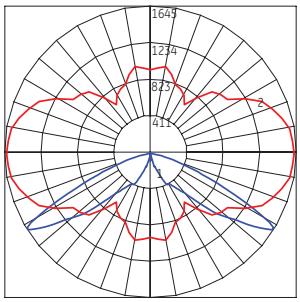

Polar Trace Vertical and Horizontal Plane through Horizontal Angle of Maximum Candlepower

EPST Type III – Asymmetric Wide (C3)
6,600 Lumens, 4000K

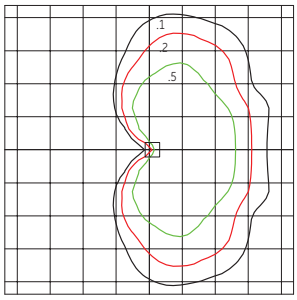

Grid Distance in Units of Mounting Height at 16'
Initial Footcandle Values at Grade

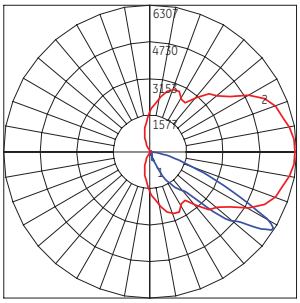

Polar Trace Vertical and Horizontal Plane through Horizontal Angle of Maximum Candlepower

EPST Type III – Asymmetric Wide (E3)
3,400 Lumens, 4000K

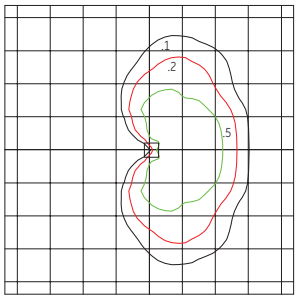

Grid Distance in Units of Mounting Height at 16'
Initial Footcandle Values at Grade

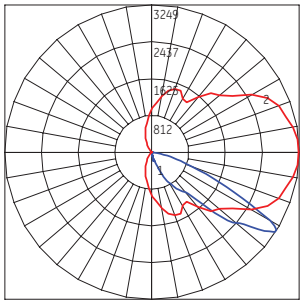

Polar Trace Vertical and Horizontal Plane through Horizontal Angle of Maximum Candlepower

Product Dimensions

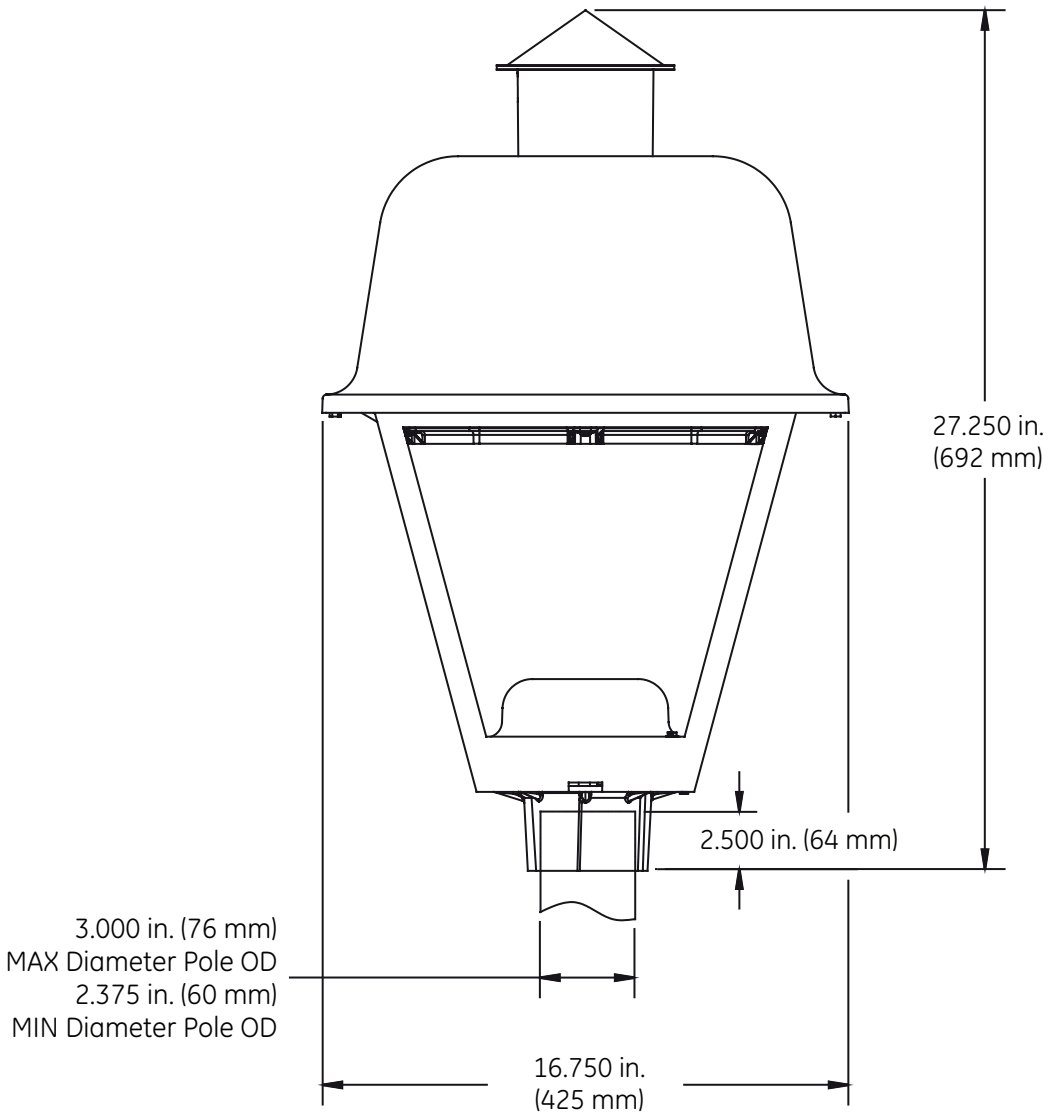

DATA

- Approximate Net Weight: 27 lbs (12 kgs)
- Suggested Mounting Height: 8-16 ft max (2.5-5 m)
- Effective Projected Area (EPA): 1.6 sq ft max (0.15 sq m)

www.gelighting.com

GE and the GE Monogram are trademarks of the General Electric Company. All other trademarks are the property of their respective owners. Information provided is subject to change without notice. All values are design or typical values when measured under laboratory conditions. GE Lighting is a business of the General Electric Company.
© 2016 GE.

OLP2897 (Rev 05/27/16)